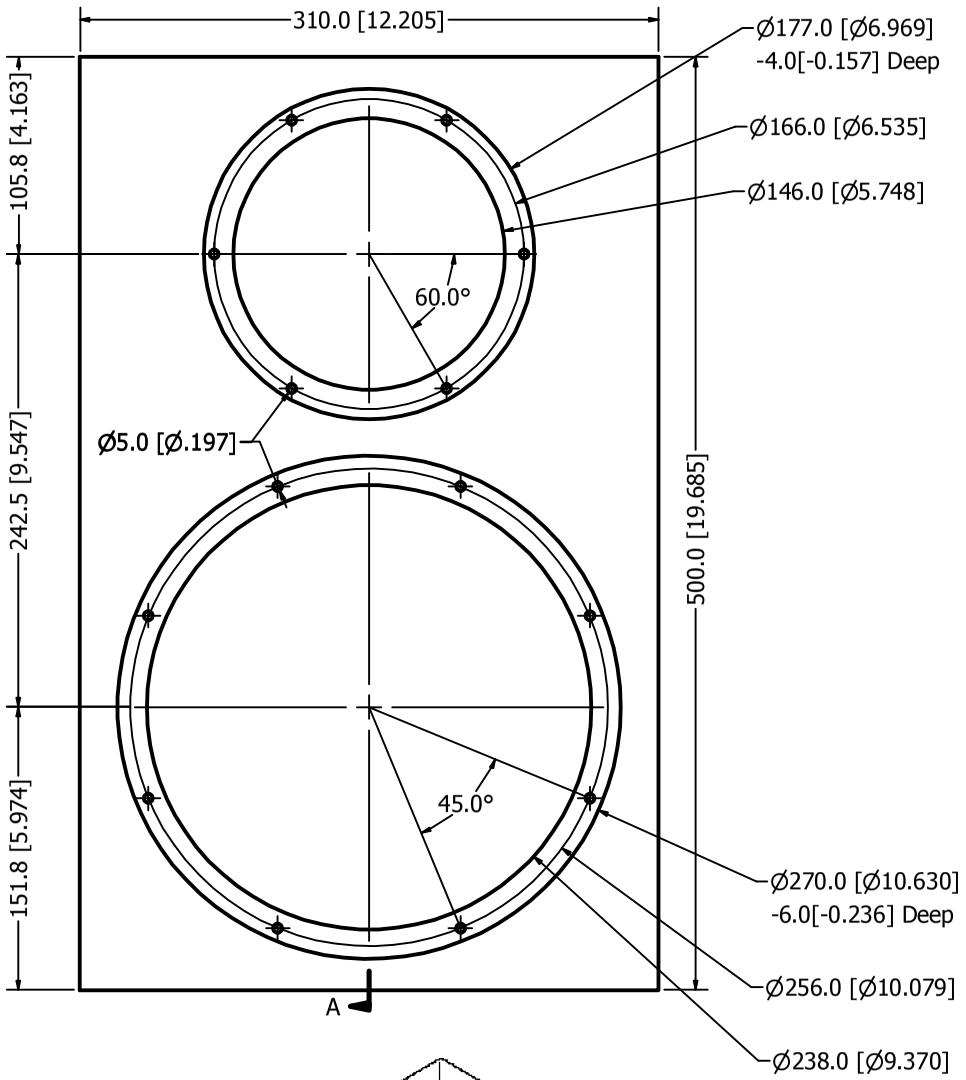

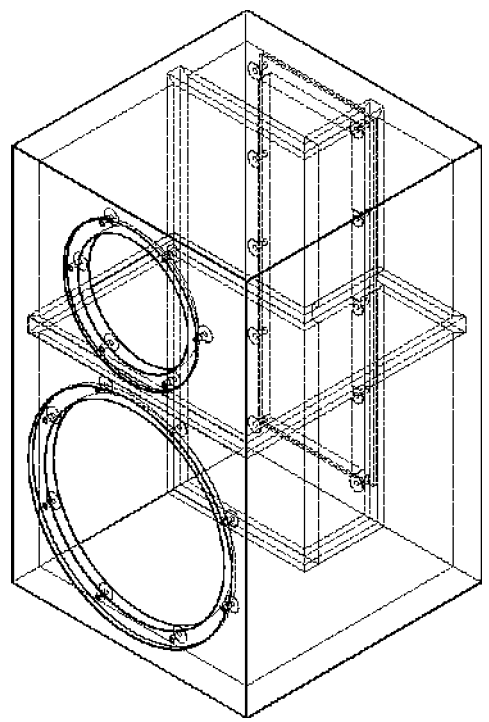

SECTION A-A
SCALE 1 / 2

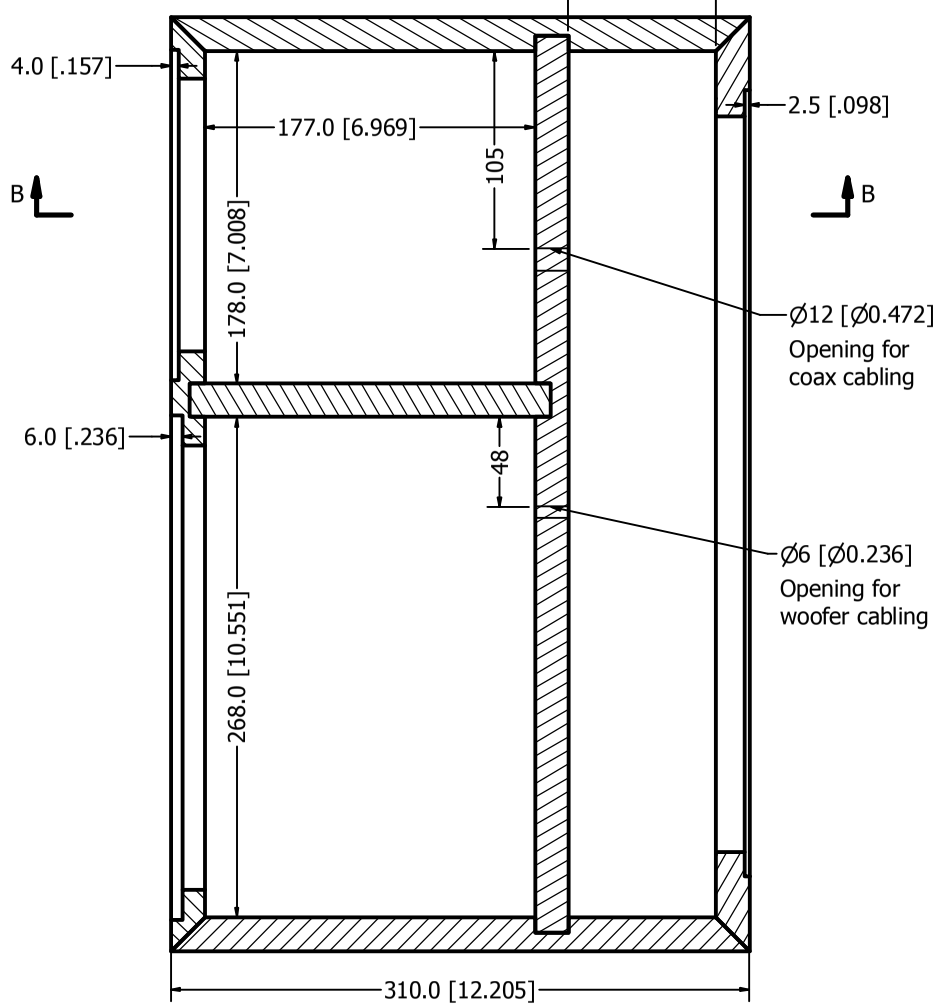

SECTION B-B
SCALE 1 / 2

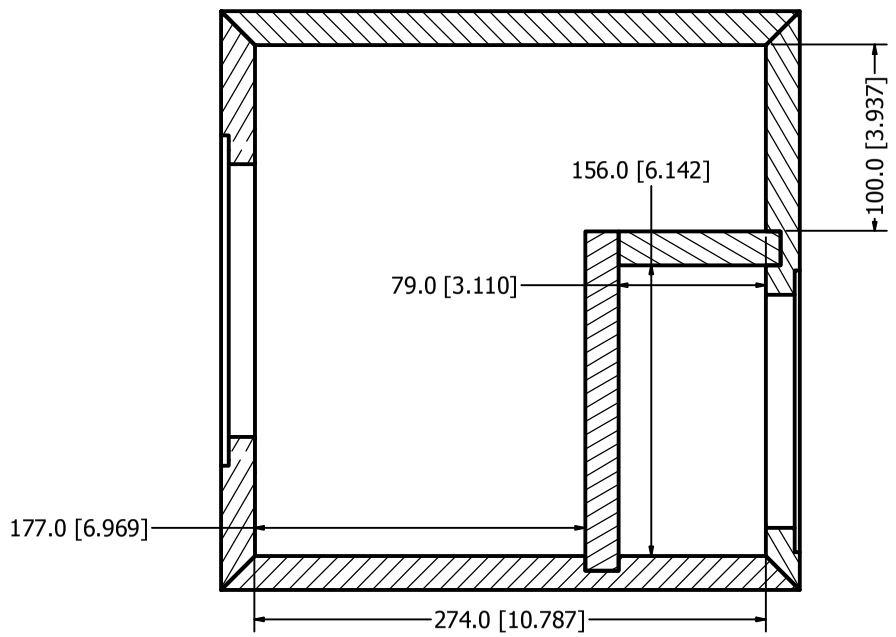

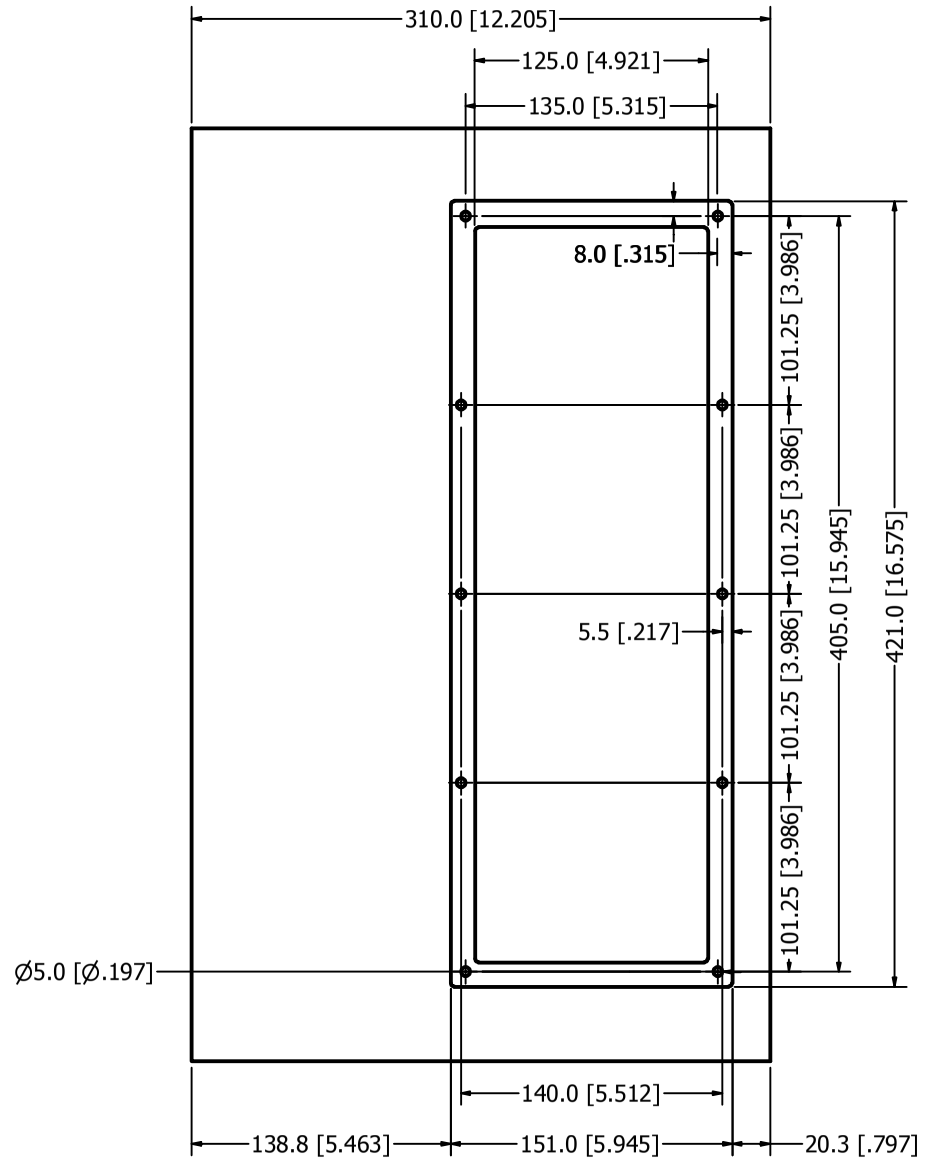

Material: 18mm Birch Ply or MDF

Dimensions are in millimeters and [inches]

Rebates shown in drawings are optional but recommended.

Please note that the guide holes for the amplifier plate in the rear panel can just be pilot holed with a 1mm drill bit.

Mitered corners are optional, only really necessary when using untreated ply finish.

This drawing is SEAS property. Every duplicating, utilization or conveyance to a third party is prohibitable according to law.

This component must be clean and with a surface energy not less than 40 mN/m (dyn/cm).

This component must be compliant with the European RoHS Directive (2015/863)

REV	DESCRIPTION	DATE	APPROVED

REVISION HISTORY

Designed by	Checked by	Approved by	Date	Date
Jamie				18.05.2020

seas

Title: CABINET KING 26CMR04Y

K02155 | Edition | Scale 1:2

8 7 6 5 4 3 2 1